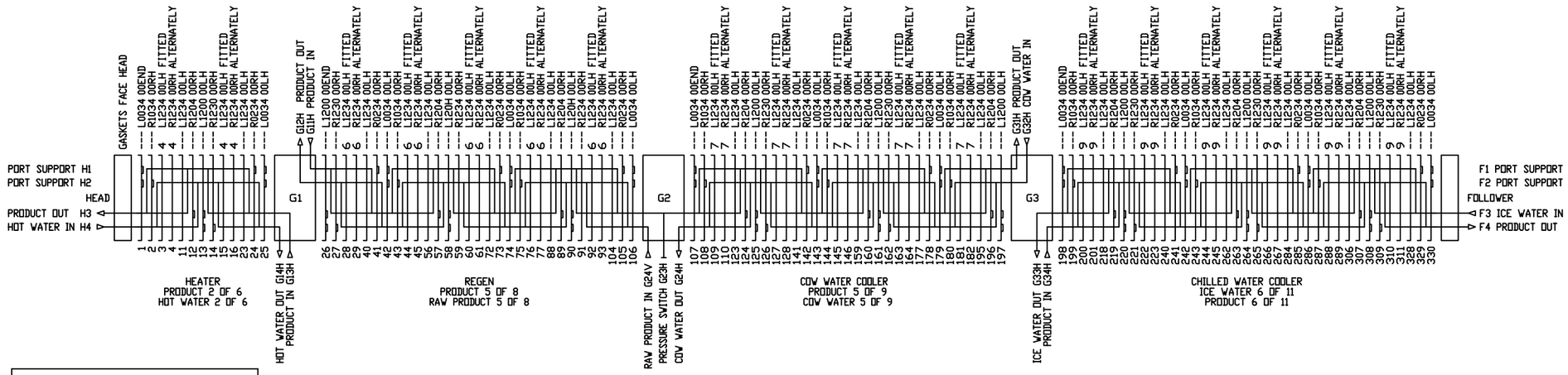

PLATES MUST BE ARRANGED ALTERNATELY LEFT AND RIGHT. FOR CONVENIENCE ON THIS DRAWING, WHERE BLOCKS OF R1234 AND L1234 PLATES OCCUR, THE TOTAL NUMBER OF EACH IS GIVEN.

PLATE IDENTIFICATION
VIEWED FROM GASKETED SIDE OF PLATE

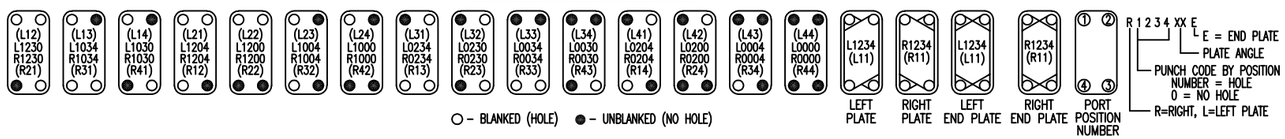

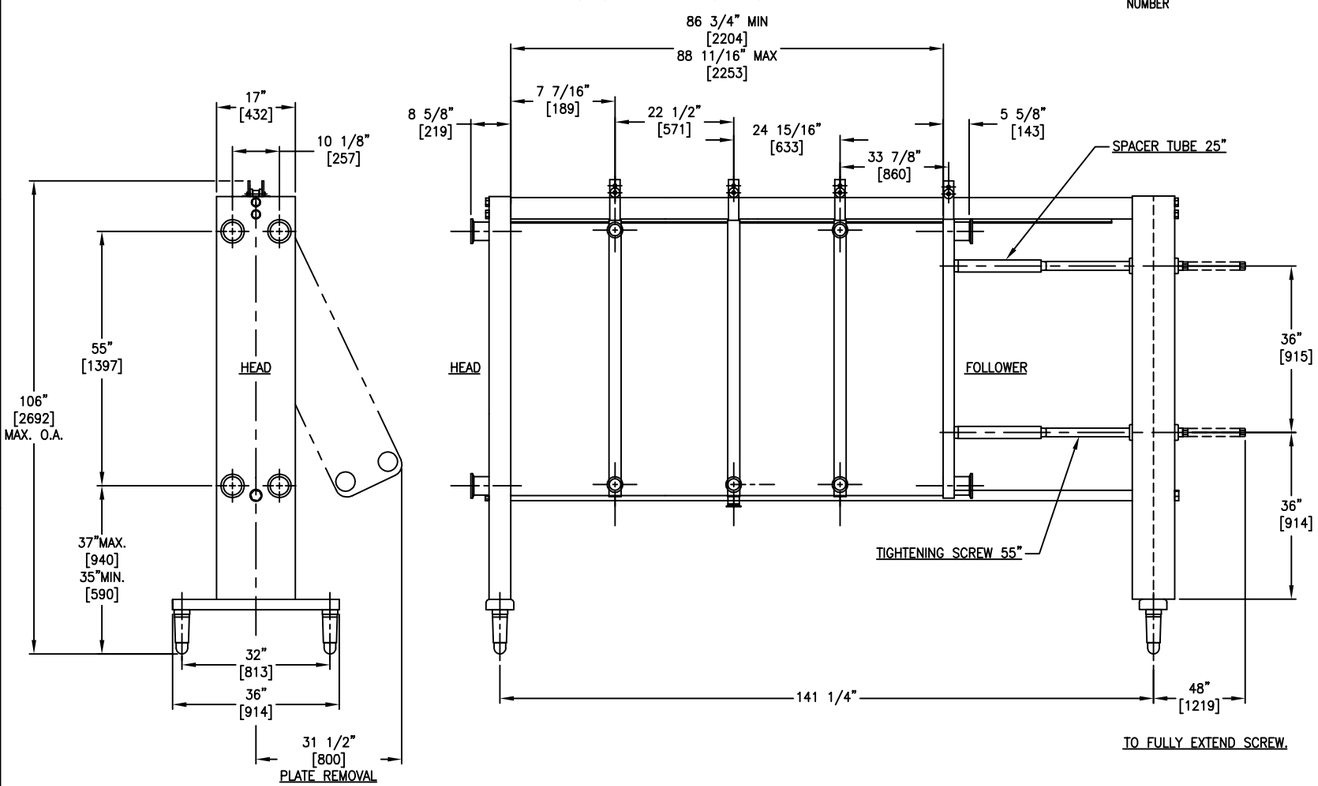

THE CONVENTIONS USED TO SHOW THE PLATE ARRANGEMENT HAVE CHANGED AS FOLLOWS:

1. THE HEAD (FIXED COVER) IS NOW SHOWN ON THE LEFT OF BOTH THE ARRANGEMENT AND THE SIDE VIEW OF THE FRAME.
2. THE PLATE PUNCH CODE IS SIMPLIFIED. SEE THE PLATE IDENTIFICATION KEY FOR DETAILS.
3. THE GRID CODES PROVIDE MORE INFORMATION. SEE THE ISOMETRIC VIEW FOR DETAILS.

APV
FACTORY SERVICE
FOR PARTS AND SERVICE CALL OUR CUSTOMER SERVICE DEPARTMENT
1-888-278-4321

NOTES

1. THE INSTALLATION, OPERATION AND MAINTENANCE OF THIS HEAT EXCHANGER SHALL BE IN ACCORDANCE WITH THE APV MODEL R51T AND R51TH HEAT EXCHANGER INSTRUCTION MANUAL.
2. THIS MODEL HEAT EXCHANGER IS TIGHTENED USING A WRENCH ON THE TIGHTENING SCREWS. CLEAN AND LUBRICATE THREADS BEFORE OPENING AND CLOSING. YOU MUST USE THE FOLLOWING: **ROCOL A.S.P. OR NEVER-SEEZ BLACK MOLY LUBE. DO NOT USE COMMON GREASE.**
   THE PLATE PACK IS TO BE TIGHTENED IN ACCORDANCE WITH THE INSTRUCTION MANUAL SUPPLIED. DO NOT TIGHTEN BELOW THE MINIMUM DIMENSION SHOWN.
3. THE CUSTOMER IS RESPONSIBLE FOR PROVIDING:
   - PROTECTION AGAINST START UP OR OPERATING PRESSURES EXCEEDING THE MAXIMUM ALLOWABLE WORKING PRESSURE.
   - PIPING TO THE FOLLOWER OR CONNECTOR GRIDS THAT ALLOWS FOR FREE MOVEMENT WHEN THE UNIT IS OPENED FOR SERVICE AND PROVIDES FLEXIBILITY FOR THE VARIATION OF THE COMPRESSED PLATAGE DIMENSIONS.
4. DIMENSIONS ARE SHOWN IN INCHES. DIMENSIONS IN BRACKETS [ ] ARE IN MILLIMETERS.
5. STANDARD TOLERANCES:
   FRAME BALL FEET LOCATIONS: ±1/4 INCH [±6mm]
   NOZZLE CENTERLINE AND FACE DIMENSIONS: ±1/8 INCH [±3mm]

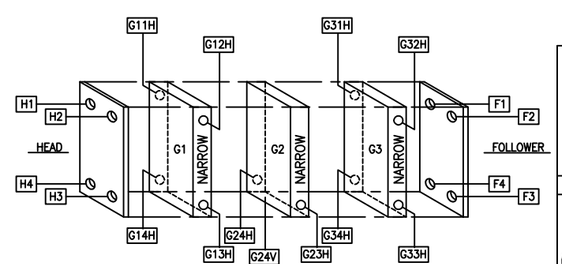

DESIGN SPECIFICATIONS

DESIGN CODE	APV STANDARD & 3A
MAX. ALLOWABLE WORKING PRESSURE	200 PSIG.
MAXIMUM OPERATING TEMPERATURE	275° F.
SERIAL NUMBER	WO 40285
HEAT TRANSFER AREA	1803 SQ.FT.
FRAME SIZE	No.6
MAXIMUM FRAME CAPACITY	339 PLATES
DRY WEIGHT	9755 LBS.
FLOODED (OPERATING) WEIGHT	11722 LBS.
TOTAL LIQUID VOLUME	237 GALS.
FINISH	#4 POLISH
ACCESSORIES SUPPLIED	RATCHET WRENCH

PROCESS SPECIFICATION

SECTION / LIQUID	FLOW RATE (LB/HR)	TEMP. IN (°F)		TEMP. OUT (°F)	ΔP (PSIG)	HEAT LOAD (BTU/HR)
HEATER						
45%CREAM	33000	179.6	→	192.0	9.1	333300
HOT WATER	60000	195	→	189.5	15.3	
REGEN						
45%CREAM	33000	192	→	144.1	13.9	1219000
45%CREAM	33000	130	→	179.6	13.9	
COW WATER COOLER						
45%CREAM	33000	144.1	→	49	19.7	2620000
COW WATER	49800	42.7	→	95.3	15.9	
ICE WATER COOLER						
45%CREAM	25000	144	→	38	13.0	2358635
WATER	60000	34	→	73.3	20.0	

FITTINGS DESCRIPTION

SIZE	MATERIAL	TYPE	LOCATION
4"	316L STN STL	TRI CLAMP	FRAME
2 1/2"	316L STN STL	TRI CLAMP	CONNECTOR GRID
2"	316L STN STL	TRI CLAMP	PRESSURE SWITCH

PLATES AND GASKETS

330 – R5 III/300, 316 STN. STL. PLATES
326 – R5, PARACIL CLIP-IN FLOW GASKETS.
4 – R5, PARACIL END GASKET
32 – R5, PARACIL PORT RING GASKETS.
H – DENOTES DRAIN PORT

TOTAL "L" PLATES – 167	TOTAL "R" PLATES – 163
145 : L1234 00	129 : R1234 00
7 : L1200 00	9 : R1034 00
9 : L0034 00	9 : R1204 00
3 : L0034 00 END	7 : R1230 00
1 : L1200 00 END	9 : R0234 00
2 : L120H 00	:

UNITED DAIRYMEN OF ARIZONA
TEMPE, AZ
WO 40285

20023003000285

P.O.NO:0009025

APV AN SPX BRAND
SPX Flow Technology Systems,Inc.
1200 W. Ash Street
Goldsboro, NC 27530
Tel: (919) 735-4570
Fax: (919) 581-1134

CONFIDENTIALITY NOTE: THE INFORMATION CONTAINED HEREON IS OF A CONFIDENTIAL NATURE AND IS THE PROPERTY OF SPX FLOW TECHNOLOGY SYSTEMS, INC. GOLDSBORO, NC, USA. IT SHALL NOT BE PHOTOCOPIED, PHOTOSTATED, OR REPRODUCED IN ANY MANNER NOR USED FOR ANY PURPOSE WHATSOEVER EXCEPT WITH WRITTEN PERMISSION OF SPX FLOW TECHNOLOGY SYSTEMS, INC. GOLDSBORO, NC, USA.

REV.	BY / DATE	CK. BY / DATE	DESCRIPTION AND LOCATION
05	GAL 4/9/02		RESTREAMED CHILLED WATER COOLER
04	KFW 9/15/99		CORRECTED PLATE PACK DIMS
03	KFW 5/9/99		CORRECTED DRG
02	KFW 4/25/99		CORRECTED DRG
01	KFW 3/12/99		CORRECTED TEMP IN DUTY 1

Description: R51T PLATE HEAT EXCHANGER

Checked:	Date:	Supersedes:	Scale:	Sheet:
		40285B0001	N.T.S.	1 OF 1
Approved:	Date:	Drawn: KFW	Date: 3-10-99	Drawing No.: 40285	Rev. 05

CAD File: 40285rev5

AUTOCAD