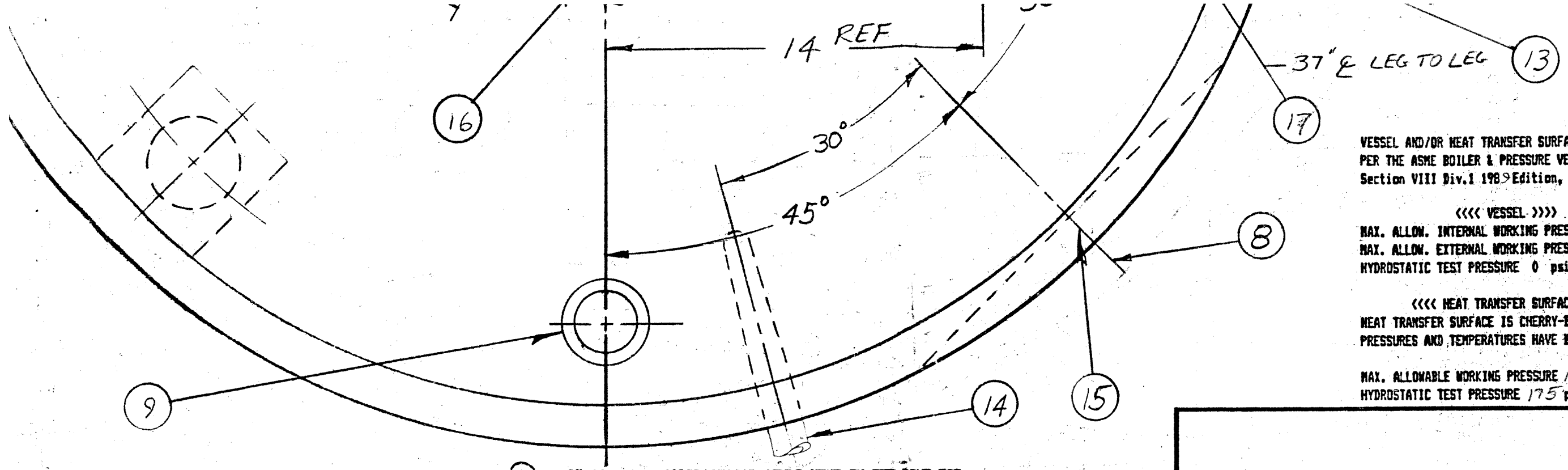

VESSEL AND/OR HEAT TRANSFER SURFACE DESIGNED
PER THE ASME BOILER & PRESSURE VESSEL Code.
Section VIII Div.1 1989 Edition, No Addenda.

<<<< VESSEL >>>>

MAX. ALLOW. INTERNAL WORKING PRESSURE 0 psi. @ 350 DEG. F
MAX. ALLOW. EXTERNAL WORKING PRESSURE 0 psi. @ 350 DEG. F
HYDROSTATIC TEST PRESSURE 0 psi.

<<<< HEAT TRANSFER SURFACE >>>>

HEAT TRANSFER SURFACE IS CHERRY-BURRELL DESIGNED. MAXIMUM ALLOWABLE PRESSURES AND TEMPERATURES HAVE BEEN ESTABLISHED BY PROOF TEST.

MAX. ALLOWABLE WORKING PRESSURE 100 psi. @ 350 DEG. F
HYDROSTATIC TEST PRESSURE 175 psi.

: VERTICAL INSULATED 'EP' FLAT BOTTOM PROCESSORS

:TY + 10% + 5" OF FREEBOARD)

ISTRUCTION

/2" STRAIGHT SIDE OF THE LINING x APPROX. 129" OVERALL
: TOP OF THE MOTOR

AL TYPE 304 SS, #4 FINISH INSIDE
- 12 GA.
TTOM - 12 GA., 3/8" PER FOOT PITCH

S GROUND AND POLISHED TO 150 GRIT MIN.
S GROUND SMOOTH TO 150 GRIT

E WELD FINISH ON ALL MOTOR SUPPORTS, MANHOLE HARDWARE
TTOM TRIM

CHANNEL WALL SURFACE ON THE SIDEWALL, (4) ZONES
CHANNEL WALL SURFACE ON THE BOTTOM HEAD, (1) ZONE
DESIGN WITH ZONE CONTROL VALVES FOR STEAM OR WATER
OLS)

RTIFICATION ON HEAT TRANSFER SURFACE ONLY

TY MINERAL WOOL INSULATION ON THE SIDEWALL
POURING INSULATION ON THE BOTTOM

- 14 GA., T304 SS, #4 FINISH
RIM - 14 GA., T304 SS, #2B FINISH

DOME TOP FOR ATMOSPHERIC OPERATION - 10 GA.
ATMOS. MANHOLE IN THE DOME TOP WITH HINGED (T304 SS)
SKET AND HOLDDOWN - T304 SS

(7) — 3" SS STANDARD PROCESSOR STYLE VENT IN THE DOME TOP

(8) — 1 - 2" SS HORIZONTAL FLUSH TYPE OUTLET - (LESS VALVE) (LONG STUDS - LADDISH)
25 3/16 OUTLET HEIGHT FROM THE CENTERLINE OF THE FLUSH OUTLET PLATE TO THE BOTTOM OF THE LOAD CELL MOUNTING PLATE

(9) — 2 - 2-1/2" 'S' CONN. INLETS WELDED IN THE TOP HEAD

(10) — LONGSWEEP AGITATOR WITH REMOVABLE AND ADJUSTABLE BAFFLE 'OLD STYLE'
1-1/2 x 3/4 HP TWO SPEED MOTOR, OPER. @ 48/24 RPM, 460/60/3 - (LESS SWITCH)
T304 SS MOTOR SUPPORTS (MILL FINISH) WITH SCOTCH BRITE WELD FINISH

(11) — SPRING LOADED CIP SEAL ON THE AGITATOR SHAFT

(12) — 1 - LIGHTNIN MIXER MODEL #XJQ-174 W/BOLTED, ADJUSTABLE IMPELLERS
1.74 HP SINGLE SPEED MOTOR, OPER. @ 350 RPM, TEFC, DURAMIX MOTOR 230/460/60/3 (LESS SWITCH), T316 SS WETTED PARTS WITH DUAL IMPELLERS WITH STABILIZER ON THE LOWER IMPELLER, STD. MIXER FINISH AND CONSTRUCTION MOUNTED ON (4) T304 SS MIXER SUPPORT POSTS WITH HEX HEAD SCREWS, LOCK WASHERS AND FLAT WASHERS, OFF-SET ON DOME TOP

(13) — 1 - T304 SS PROJECTILE WELL FOR FOXBORO RTD - (LESS RTD.)

(14) — 1 - T304 SS PROJECTILE WELL FOR TAYLOR RECORDER - (LESS RECORDER)
(TAYLOR EQUIV. SK10274)

(15) — 2 - LIFTING LUGS

(16) — 1 - CIP SPRAY UNIT (SB-1) REMOVABLE WITH 2-1/2" #15 SS TANK CONNECTION IN THE TOP HEAD WITH 1-1/2" 'S' CONN. ON THE SPRAY UNIT

(17) — C-B STD. LOAD CELL BASE - INCLUDES: (3) T304 SS ADJUSTABLE LEGS WITH MOUNTING PLATES TO MATE WITH COMPANION FLANGES OF LOAD CELLS (LOAD CELLS NOT INCLUDED) NO BOLT HOLES

E- 427-89

INVOICE NO. LF 90854 QUOTE NO. 83396

SOLD TO:
GENERAL FOODS CORP
BIRDS EYE DIVISION
140 SPRING STREET
AVON N.Y. 14414

SHIPPED TO:
-SAME-

ALTERATION	DATE	CHANGE SH. NO.	NO.	ALTERATION	DATE	CHANGE SH. NO.
			2	REVISED OUTLET HT.	12-5-83	
			1	REVISED WELLS	11-5-16-89	

DRAWING NO.

	BY	DATE
DR.	ASN	10-12-83
RC.		
AP.		
SCALE 1 1/2" = 1 FT.		

PART NO.	MATERIAL	DESCRIPTION	ASSEMBLY NO.
		FINAL ASSEMBLY DOMETOP ~ ATMOSPHERIC LOAD CELL BASE 500 GAL EP PROCESSOR	REVISION #2 E-427-89 A

Cherry-Burrell
575 EAST MILL STREET
LITTLE FALLS, NEW YORK 13365
A UNIT OF RTCA INTERNATIONAL CORPORATION

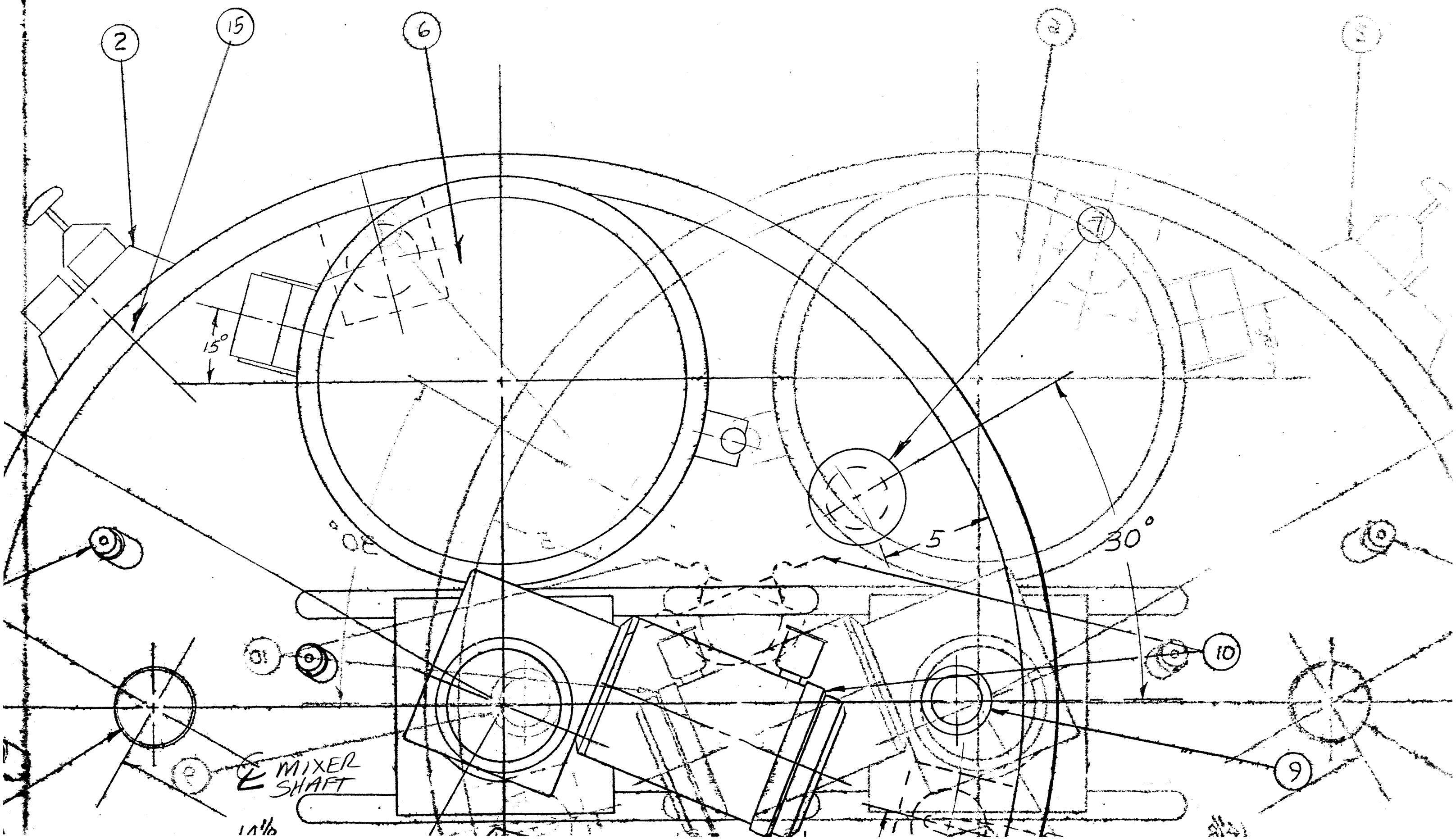
2
15
6
2
3
7
15°
30°
5
30°
10
10
9
9
℄ MIXER SHAFT

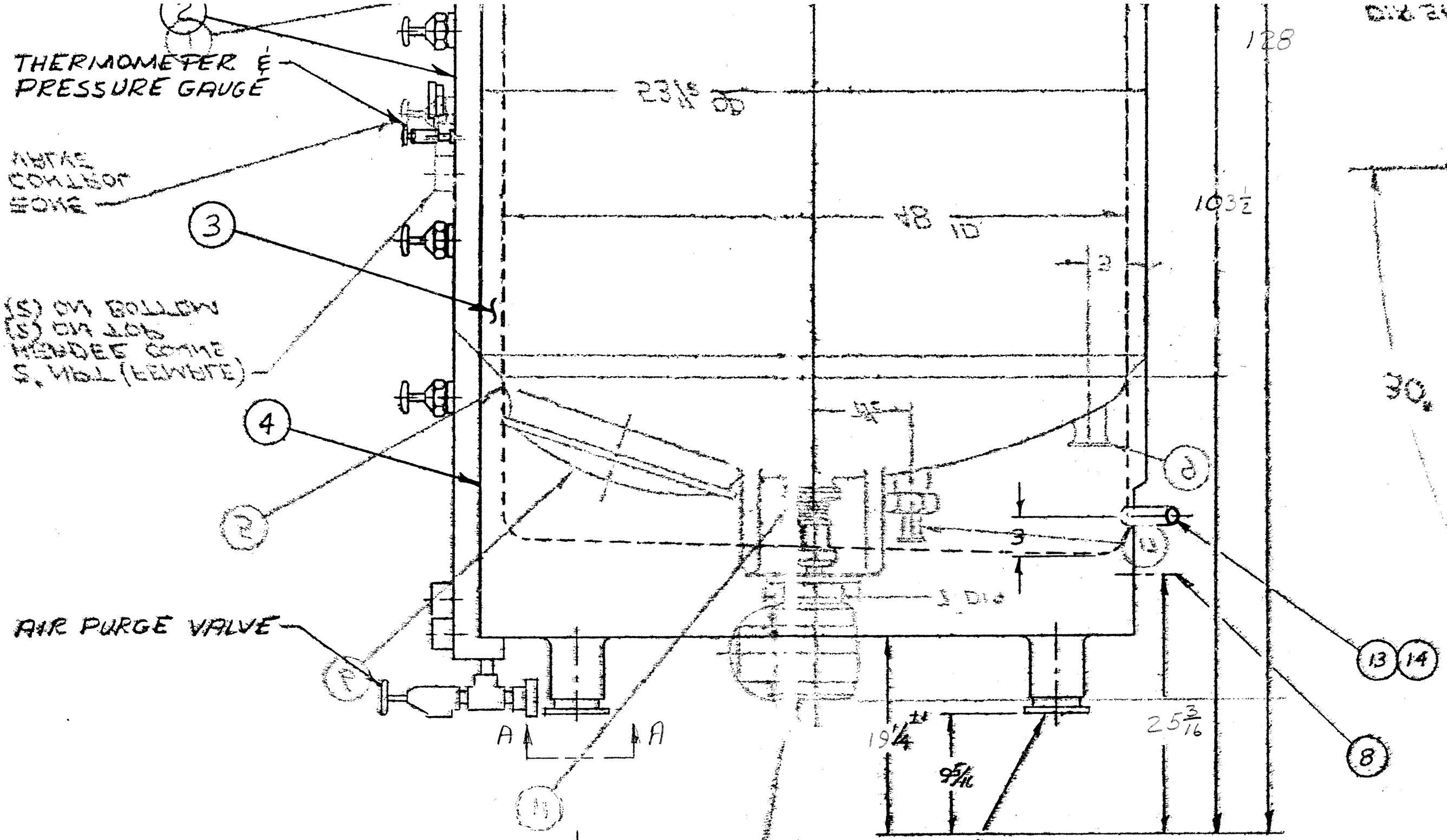

NOTE: NO BOLT HOLES

VIEW A-A

3IN = 1FT

LOAD CELL LEG DETAIL

SEE PLAN VIEW FOR ORIENTATION