NOZZLE	SIZE	QTY.	DESCRIPTION	SERVICE
A	18"	1	STANDARD MANWAY W/ HINGED COVER, GASKET & HOLD DOWN	MANWAY
B	3"	1	CUSTOMER SUPPLIED TRI-CLOVER #762 TANK OUTLET VALVE	OUTLET
C	2"	3	SANITARY CLAMP CONNECTION WELDED IN TOP HEAD	INLET
D	1-1/2"	1	SANITARY CLAMP CONNECTION WELDED IN TOP HEAD FOR CULINARY STEAM	CULINARY STEAM INLET
E	1-1/2"	1	SANITARY CLAMP CONNECTION WELDED IN LOWER SIDEWALL W/ SETBACK FOR SAMPLE PORT (LESS VALVE)	SAMPLE VALVE
F	2"	2	SANITARY CLAMP CONNECTION WELDED TANGENTIALLY IN LOWER SIDEWALL	TANGENTIAL INLET
G	2-1/2"	1	SANITARY CLAMP CONNECTION WELDED TANGENTIALLY IN LOWER SIDEWALL	TANGENTIAL INLET
H	4"	1	STANDARD SLIP ON VENT ASSEMBLY W/ SCREEN & SHROUD	VENT
J	–	1	VERTICAL AGITATOR 60" DIA. NON REMOVABLE BOTTOM SWEEP W/ 2" SS PIPE SHAFT 3 HP SINGLE SPEED NORD TEFC INVERTER DUTY MOTOR OPERATING @ 29 RPM 230/460/60/3 (LESS SWITCH) INCLUDES: STAINLESS STEEL MOTOR SUPPORTS, SPRING LOADED SPLIT CIP SEAL, BOTTOM SHAFT GUIDE W/ REPLACEABLE NYLON BEARING, REMOVABLE & ADJUSTABLE BAFFLE, 2 BOLT STAINLESS STEEL DRIVE COUPLING NOTE: AGITATION IS DESIGNED FOR BLENDING ESL NON-DAIRY CREAMERS WITH A VISCOSITY OF 500 CPS OR LESS	AGITATION
K	1.5"x3"	1	1.5" SANITARY CLAMP CONNECTION DUAL SPRAY BALL UNIT, REMOVABLE, MOUNTED IN 3" SANITARY CLAMP CONNECTION	CIP
L	1 1/4"-18	1	PROJECTILE WELL FOR THERMOMETER, ANDERSON EQUIVALENT # 41247 (LESS THERMOMETER)	THERMOMETER
M	1 1/4"-18	1	PROJECTILE WELL FOR RTD, ANDERSON EQUIVALENT # 41247 (LESS RTD)	RTD
N	–	1	ANDERSON LEVEL SHELL ONLY (LONG #71060-A3) (LESS TRANSMITTER)	LEVEL
P	–	2	STAINLESS STEEL LIFTING LUGS (NOT SHOWN)	LIFT LUGS
Q	–	4	STAINLESS STEEL PIPE SUPPORTS W/ ADJUSTABLE BALL FEET- INCLUDES: HORIZONTAL BRACING	LEG SUPPORT
R	2"	4	HEAT TRANSFER CONNECTIONS W/ DELUXE HEADER & CONTROL VALVES FOR EACH ZONE – NPT FEMALE	HEAT TRANSFER

GENERAL NOTES:

1. ALL PRODUCT CONTACT SURFACES TO BE TYPE 316L SS UNLESS OTHERWISE NOTED.
2. ALL SHEATHING PENETRATIONS TO BE FLARED & SILICONE CAULKED.

ASME NOTES:

1. MATERIALS & CONSTRUCTION PER ASME SECTION VIII, DIV 1, 2001 EDITION, 2002 ADDENDA.
2. ALL WELDERS AND WELDING PROCEDURES ARE CERTIFIED IN ACCORDANCE WITH ASME SECTION IX.
3. SEE NAMEPLATE DETAILS FOR CODE STAMPING REQUIREMENTS.
4. VESSEL IS EXEMPT FROM IMPACT TESTING PER UHA-51(d&e).
5. YEAR IN WHICH COMPLIANCE WITH ALL CODE REQUIREMENTS HAVE BEEN MET IS TO BE STAMPED IN THIS SPACE.
6. HEAT TRANSFER DESIGN OPTIONS; SIDE WALL: CW08 REV-A, BOTTOM: DMP22.
7. HEAT TRANSFER JACKET ASME CODE BOUNDARY ENDS AT THE FIRST CIRCUMFERENTIAL JOINT OF THE INLET & OUTLET PIPE NIPPLES. REF ASME SECTION VIII, U-1(e)(1)(a).
8. REFER TO BILL OF MATERIALS #E-217-03 FOR SUB ASSEMBLIES.

INTERNAL FINISH SPECIFICATION:	
MATERIAL:	#4 FINISH –
WELDS:	150 GRIT MIN.
EXTERNAL FINISH SPECIFICATION:	
MATERIAL:	#4 FINISH
WELDS: EXCEPTIONS: LIFT LUGS, MOTOR SUPPORTS, MANWAY HDWR & LEG BRACING	150 GRIT MIN. UNIFORMLY MASKED AND CLEANED ONLY TO REMOVE WELD DISCOLORATION

WEIGHTS:	
EMPTY VESSEL: APPROX 5,067 LBS	FULL @NOM. CAPACITY: 30,072 LBS. USING SPECIFIC GRAVITY = 1.0

TESTING PRESSURES:			
VESSEL:	N/A	JACKET:	134 PSIG

CIP REQUIRED: 80 GPM @ 25 PSIG

DESIGN DATA

VESSEL NOMINAL CAPACITY: 3,000 GALLONS

SHELL DESIGN CONDITIONS: PRESSURE: ATMOSPHERIC

JACKET DESIGN CONDITIONS: ASME CODE STAMPED
PRESSURE: 100 PSIG
MAX. TEMP.: 350 °F
MIN. TEMP.: -20°F

VESSEL MATERIAL:	SPEC.	GRADE	THICKNESS/CLASS	NOTES
SHELL:	SA-240	316L	10 GA (0.135")	102" I.D.
TOP HEAD (ASME F&D):	SA-240	316L	7 GA (0.1874")	108" I.D.
CONICAL BOTTOM HEAD:	SA-240	316L	7 GA (0.1874")	102" I.D., 150° INCLUDED ANGLE
SIDE WALL SHEATHING:	SA-240	304	12 GA (0.105")	
BOTTOM TRIM (CONICAL):	SA-240	304	10 GA (0.135")	108" I.D., 150° INCLUDED ANGLE
SANITARY CLAMP FERRULES:	SA-479	316L		
THERMOWELL:	SA-479	316L		
PRODUCT CONTACT TUBING:	SA-249	316L		
LEVEL SHELL:	SA-479	316L		
HEAT TRANSFER JACKET:				
CHANNEL SIDE JACKET:	SA-240	304	16 GA (0.062")	160 SQ. FT., (3) ZONES
DIMPLE BOTTOM JACKET: ☐	SA-240	304	☐ 14 GA (0.751")	43.6 SQ. FT., (1) ZONE
SIDE JACKET MANIFOLDS:	SA-240	304	10 GA (0.135")	DELUXE HEADER DESIGN
BOTTOM DIMPLE MANIFOLDS: ☐	SA-240	304	10 GA (0.135")	DELUXE HEADER DESIGN
PIPE NIPPLES SIDE JACKET:	SA-312	TP304 WLD.	SCH 40	2" FEMALE NPT
PIPE NIPPLES BOTTOM JACKET:	SA-312	TP304 WLD.	SCH 40	2" FEMALE NPT
OTHER MATERIAL:				
LIFTING LUGS:	SA-240	304	QTY. (2)	NOT SHOWN
LEG SUPPORT:	SA-312	TP304 WLD.	6" SCH 40	WITH ADJUSTABLE BALL FEET
MANWAY GASKET:	–	–	–	GRAY RUBBER
SWEEP BLADES:	SA-240	316L	1/4" THK	
AGITATOR SHAFT:	SA-312	TP316L WLD.	2" SCH 40	
HORIZONTAL BRACING:	SA-249	304	1-1/4" O.D. TUBE	
INSULATION (SIDE WALL & BOTTOM):			3" CHLORIDE & ASBESTOS FREE SOFT FIBERGLASS	

SHOP TOLERANCES:	
SHELL: DEVIATION FROM VERTICAL: ± 1/2" OUT OF ROUNDNESS: ± 1" OF NOM. "D"	NOZZLES: PROJECTION: SHORTEST DISTANCE FROM OUTSIDE SURFACE TO FLG. FACE ± 1/4" DEVIATION FROM HORIZONTAL, VERTICAL OR INTENDED POSITION ± 1/2" DEVIATION OF BOLT HOLES IN ANY DIRECTION ± 1/8" DEVIATION FROM ANGULAR LOCATION ± 1/2".
HEADS: OUTER PROFILE: NOT TO EXCEED 1.25" OF NOM. "D" INNER PROFILE: NOT TO EXCEED .625" OF NOM. "D"	
MANWAY: LOCATION IN ANY PLANE ± 1/2"	
SUPPORTS: DEVIATION FROM ANGULAR LOCATION ± 1°. DEVIATION FROM REFERENCE LINE ± 1/4".	WELD FILLET SIZE: + 1/8", – 0"

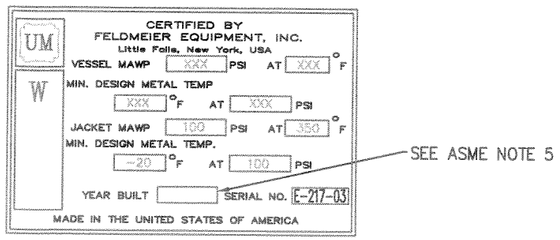

ASME NAMEPLATE STAMPING

WELDING SPECIFICATIONS: LISTED SPEC'S. ARE APPROVED FOR USE UNLESS OTHERWISE NOTED ON THIS DRAWING		
WS101A	R4	WCB 1000 R7
WS102B	R1	
WS111	R–	
WS101S	R–	

NO.	ALTERATION	DATE	CHG. BY
	REVISED DIMPLE BOTTOM JACKET WAS CHANNEL BOTTOM JACKET, BOTTOM DIMPLE MANIFOLDS WAS BOTTOM JACKET MANIFOLDS AND 14 GA WAS 16GA THICKNESS	7/2/03	AWS
	REVISED PER RETURNED DWG DATED 4/10/03	5/7/03	AWS

QUOTE N º 021931D1 REV #2 P.O. Nº. 38000

FELDMEIER EQUIPMENT
575 E. Mill Street
Little Falls, New York 13365

DRAWN BY: RGF ENGRG. Approved By Al REV B
DATE 4/4/03 SHEET: 1 of 2

QTY: (1) 3,000 GALLON 102" I.D.
VERTICAL INSULATED 'EPC' PROCESSOR TANK

SOLD TO: ANDERSON & DAHLEN, INC
6850 SUNWOOD DRIVE NW, RAMSEY, MN 55303

SHIP TO: MORNING STAR
MADISON, WI

DRAWING NO. E-217-03

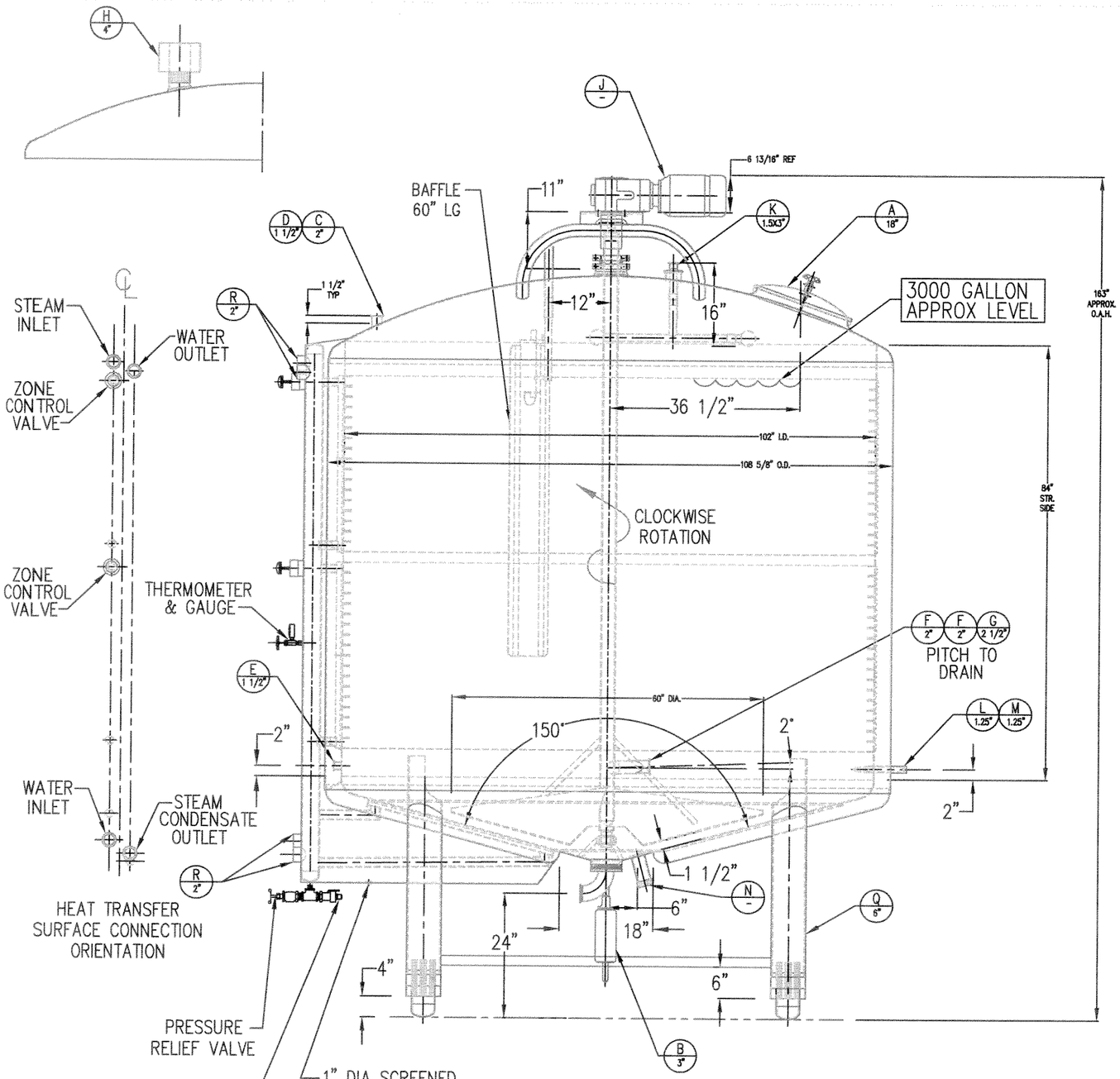

ELEVATION

SEE PLAN VIEW FOR TRUE ORIENTATION

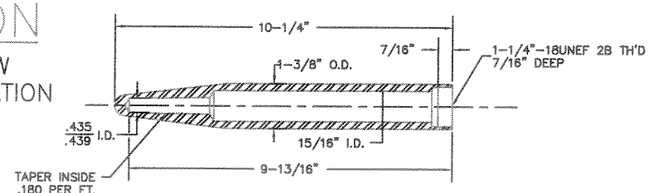

PROJECTILE WELL DETAIL

(ANDERSON EQUIV. #41247)
(TAYLOR EQUIV. #26P397)

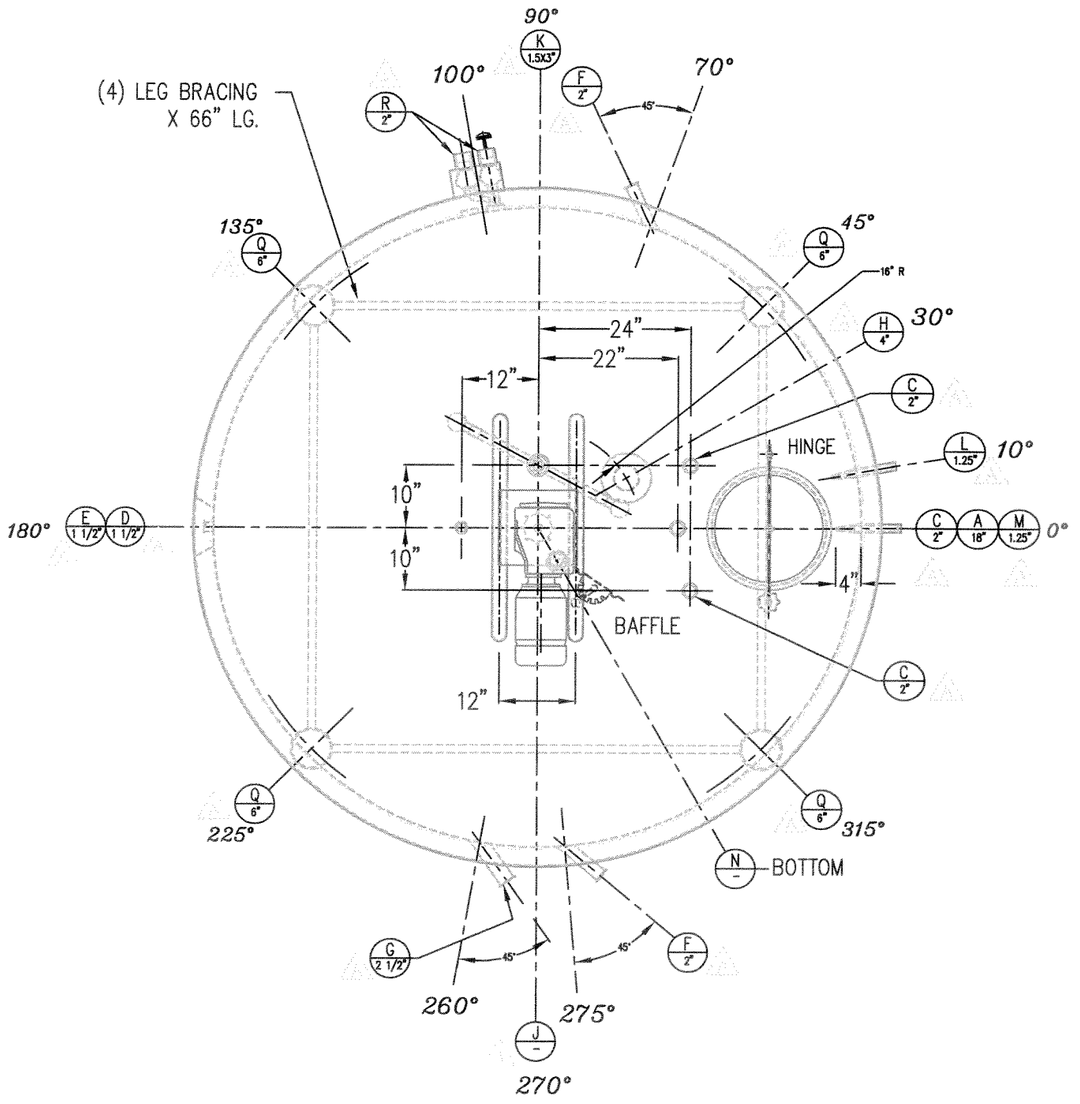

PLAN VIEW

QUOTE N º 021931D1 REV#2 P.O. Nº. 38000

FELDMEIER EQUIPMENT
575 E. Mill Street
Little Falls, New York 13365

DRAWN BY: RGF ENGRG. Approved By AI REV B
DATE 4/4/03 SHEET: 2 of 2

QTY: (1) 3,000 GALLON 102" I.D.
VERTICAL INSULATED 'EPC' PROCESSOR TANK

SOLD TO: ANDERSON & DAHLEN, INC
6850 SUNWOOD DRIVE NW, RAMSEY, MN 55303

SHIP TO: MORNING STAR
MADISON, WI

DRAWING NO.
E-217-03